aura

TROUSER RACK W900mm
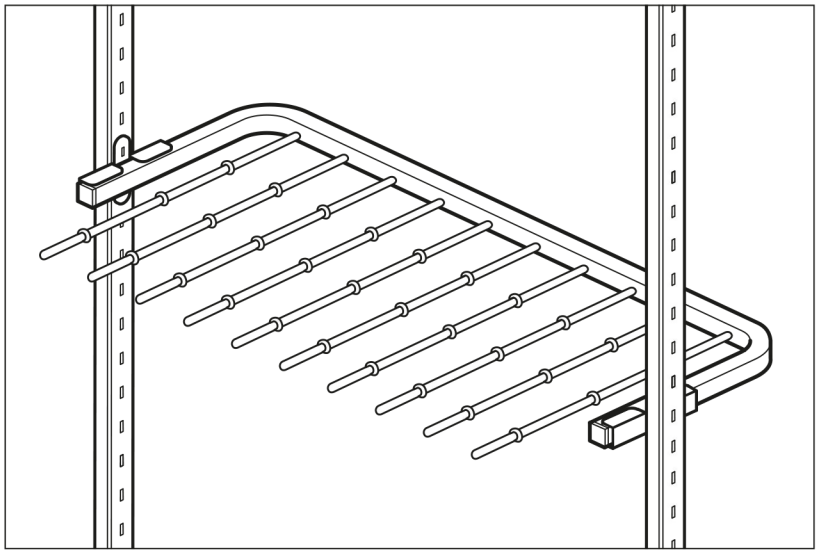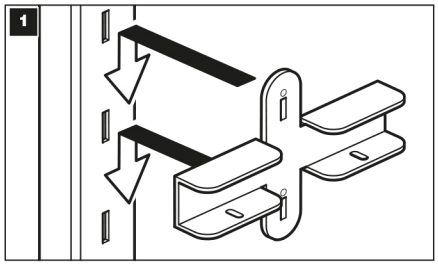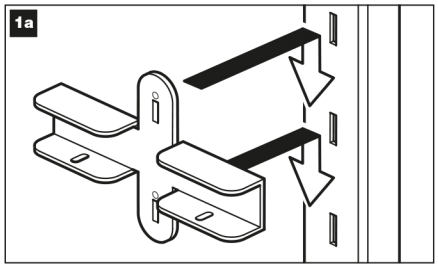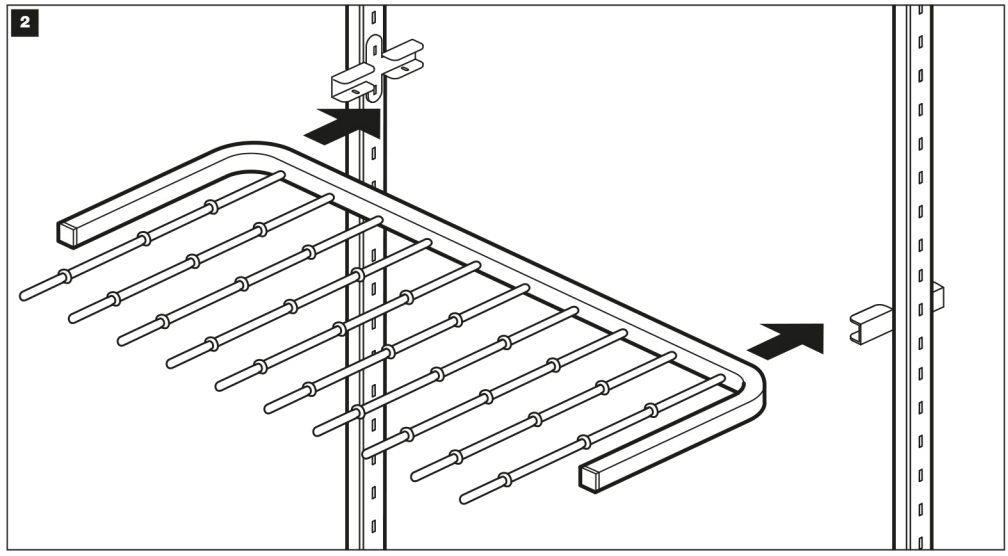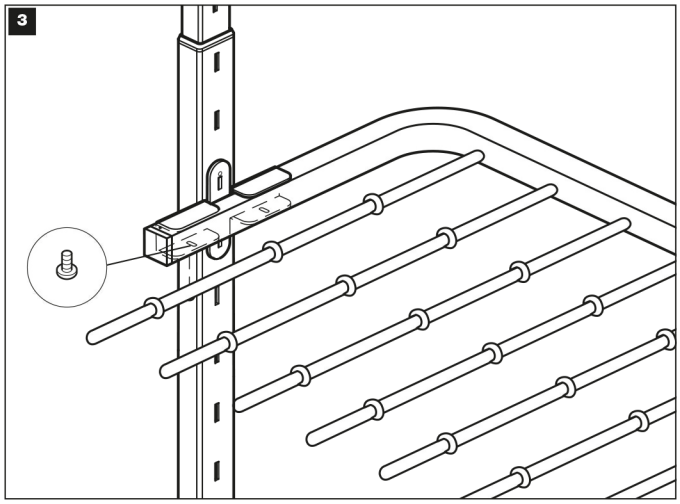
2681-SC