SWIFT EDGE
Garden lawn and border edging

Installation Instructions

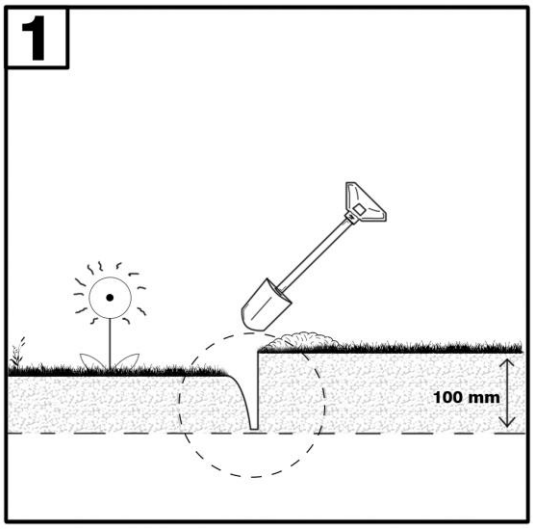

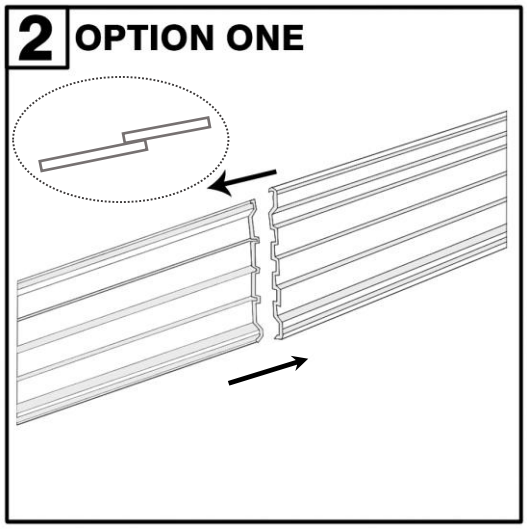

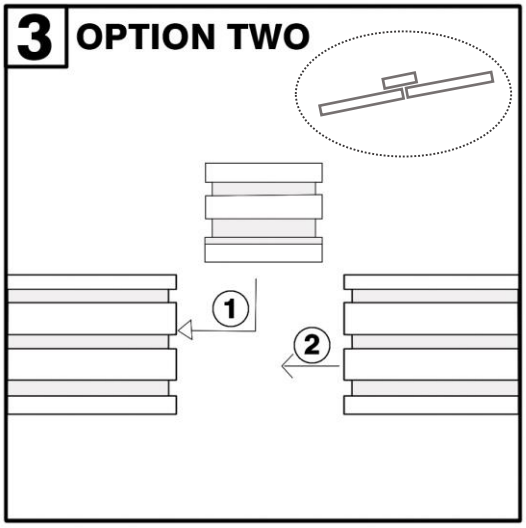

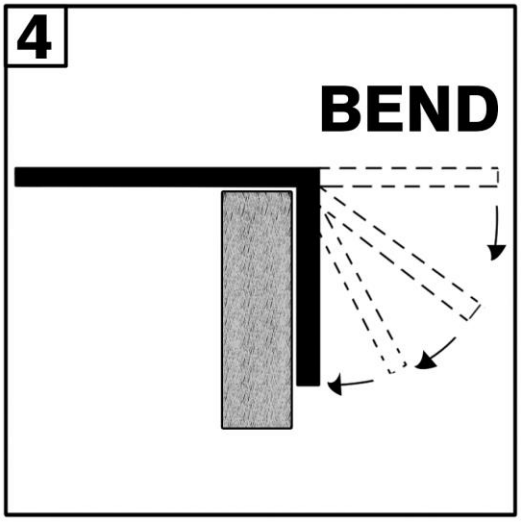

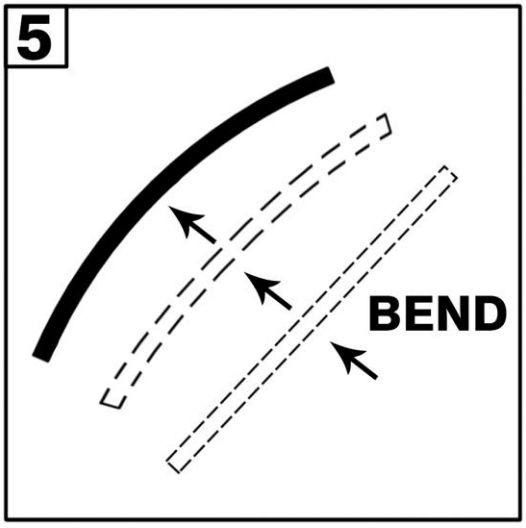

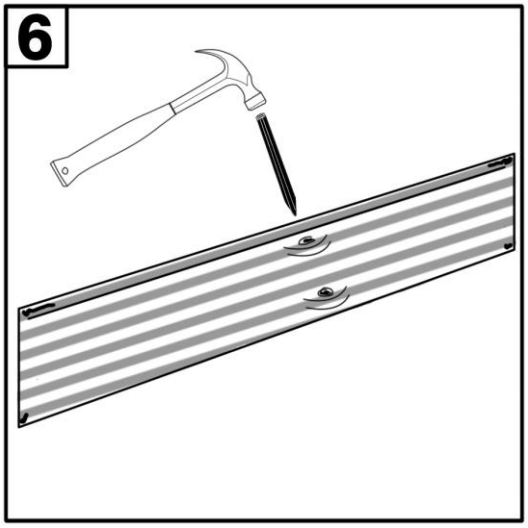

Swift Foundations Ltd –
Top Barn - Beckhouse Farm Scagglethorpe –
Malton – North Yorkshire - YO17 8ED

01944 758455
sales@swiftfoundations.co.uk
www.swiftfoundations.co.uk